Sneeze Guard Brackets Specifications

Model No.

Phone: (631) 226-6688
FAX: (631) 226-6890

side view

end bracket

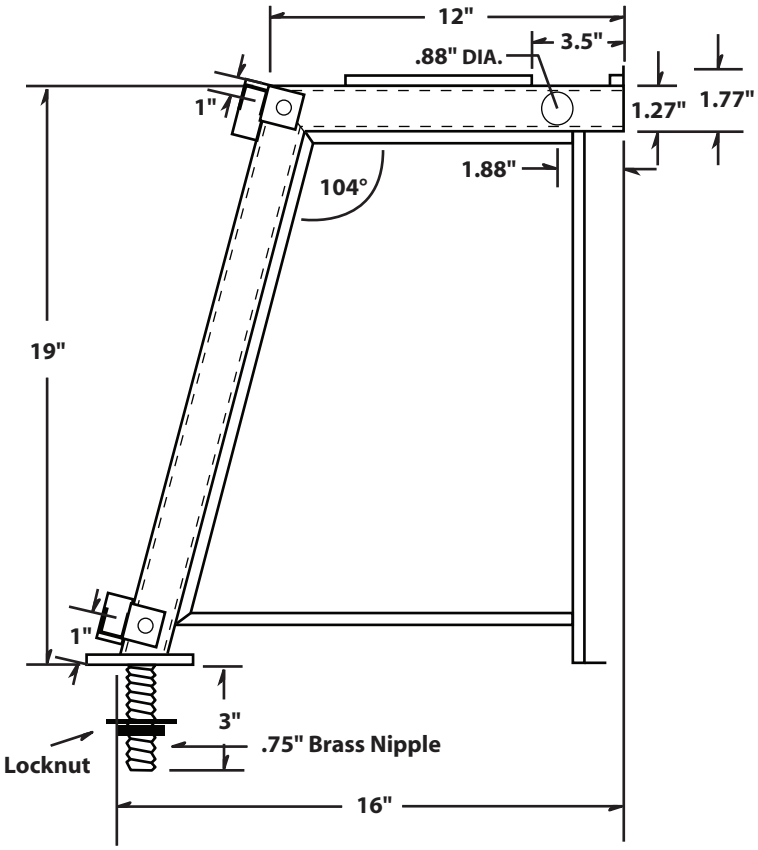

middle bracket

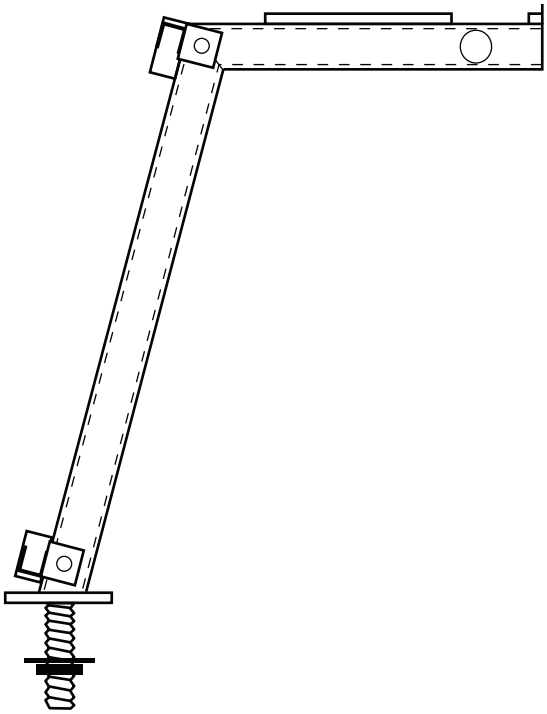

top view

optional screw-down plate

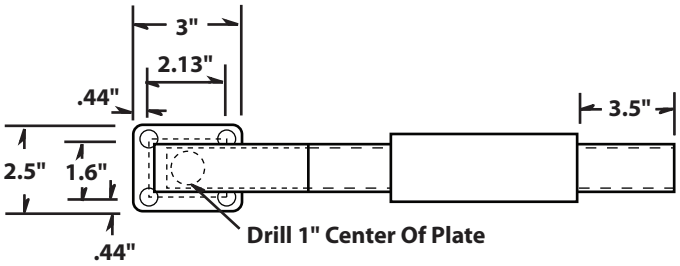

standard threaded nipple plate

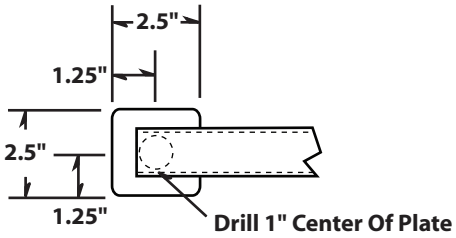

Copyright ©2006 Marsal & Sons, Inc. All designs and specifications presented in this document are subject to change without notice due to constant innovation.